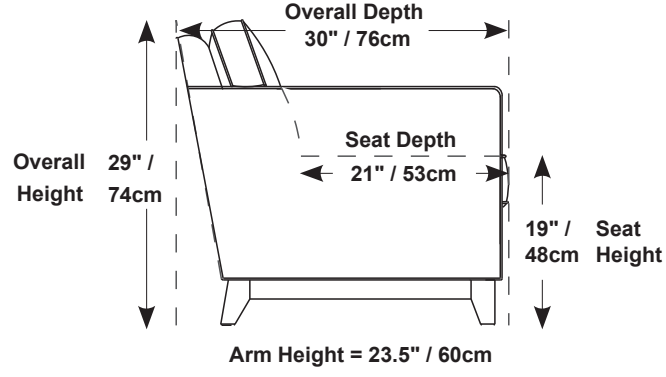

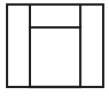

28" / 71cm wide
02 chair
IA = 24" / 61cm

Weight	35 lbs
Volume	19 ft³
Com Fabric	4 yards

JULES